Supplementary Materials for

Modification of the bait-lamina test to estimate the soil macrofauna and mesofauna feeding activity

Evgenii L. Vorobeichik* and Igor E. Bergman

Institute of Plant and Animal Ecology, Ural Branch of the Russian Academy of Sciences, 8 Marta Str. 202, 620144, Yekaterinburg, Russia

* Corresponding author. Email: ev@ipae.uran.ru

Description of the study site

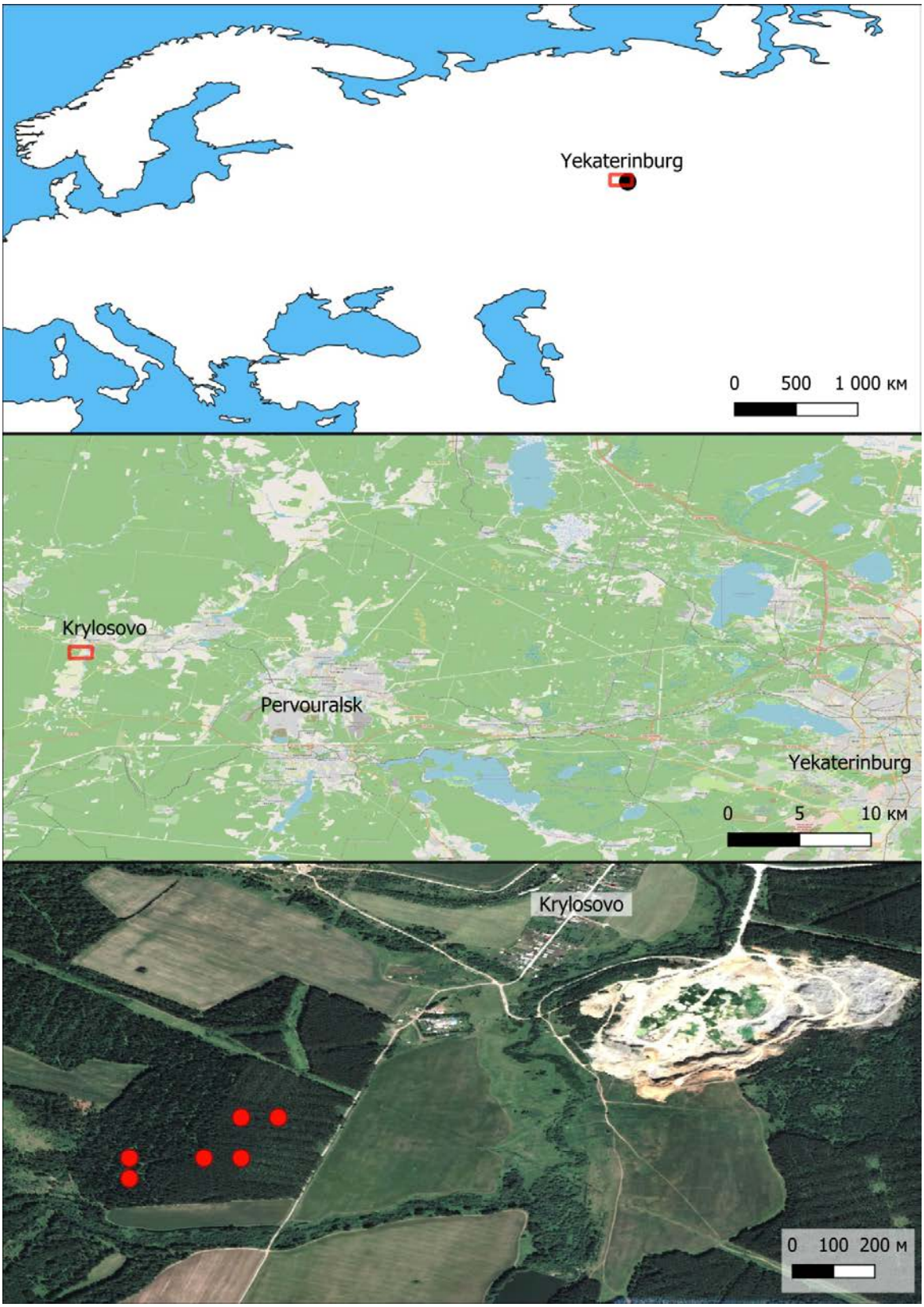

Fig. S1. Location of the study area. The red rectangles represent the area shown in detail at the smaller scale, while the red dots denote the sampling plots. The scheme is based on the data from Open Street Map (www.openstreetmap.org and www.opentopomap.ru).

Fig. S2. Photo of a pine forest (*Pinus sylvestris*) at the study site.

Table S1. Characteristics of the study site

Landscape description	Pine forest on the gentle southeastern midslope of a small mountain Krasnaya (412 m a.s.l.)
Altitude, m a.s.l.	310–316
Stand composition *	90–100% of *Pinus sylvestris* with up to 10% of *Betula* spp., *Abies sibirica*, and *Picea obovata*
Stand age, years	70–90
Dominant species of herbaceous layer **	*Oxalis acetosella* L. (60–75%), *Calamagrostis obtusata* Trin. (25–45%), *Dryopteris carthusiana* (Vill.) H.P.Fuchs (15–40%), *Aegopodium podagraria* L. (10–25%)
Minor species of herbaceous layer **	*Aconitum septenrionale* Koelle (2–20%), *Carex montana* L. (1–15%), *Fragaria vesca* L. (5–10%), *Asarum europaeum* L. (1–5%), *Lathyrus vernus* (L.) Bernh. (1–5%), *Maianthemum bifolium* (L.) F.W.Schmidt. (1–5%), *Betonica officinalis* L. (1–3%), *Geum rivale* L. (1–4%), *Ajuga reptans* L. (1–3%), *Veronica chamaedrys* L. (1%), *Viola selkirkii* Pursh ex Goldie (0.5–1.5%)
Height of herbaceous layer, cm	45–75
Projective cover of moss layer, %	60–85
Soil description	Soddy-podzolic soil (Stagnic Retisol). Soil texture is medium loam in the upper part of the soil profile and heavy loam in the lower one. pH (water) is 5.3–5.5 and 4.7–4.9 in the forest litter and A1.
Humus forms	Dysmull, Hemimoder, and Eumoder

* Fractions of the species in the total number of individuals (for trees of not less than 4 cm in diameter at breast height).

** Projective cover is in parentheses.

Table S2. Regional features of soil fauna *

Main macro-detritivores taxa in regional fauna	Earthworms, enchytraeids (occupy an intermediate position between macrofauna and mesofauna), millipedes, Nematoceran larvae**, Coleopteran larvae (Elateridae***), mollusks**
Epigeic earthworms	*Dendrobaena octaedra* (2–4 cm long), *Dendrodrilus rubidus* (2–4 cm)
Epi-endogeic earthworms	*Rhiphaeodrilus diplotetratheca* (5–10 cm), *Lumbricus rubellus* (5–10 cm), *Eisenia atlavinyteae* (up to 20 cm)
Endogeic earthworms	*Aporrectodea rosea* (5–7 cm), *Perelia tuberosa* (7–12 cm), *Octolasion lacteum* (7–12 cm), *Aporrectodea caliginosa caliginosa* (up to 15 cm)
Anecic earthworms****	Absent
Nematoceran larvae	Tipulidae and Limoniidae (3–4 cm long); Bibionidae, Sciaridae, Chironomidae, Cecidomyiidae, and some others (about 0.5–1 cm long)
Woodlice (Oniscoidea)	Absent or occasional
Wood cockroaches (*Ectobius*)	Absent or occasional
Millipedes	Only *Polyzonium germanicum* (1.0–1.5 cm long), low abundance
Dominant species of Elateridae	*Athous subfuscus*, *Dalopius marginatus*
Dominant species of mollusks	*Perpolita hammonis*, *Discus ruderatus*, *Euconulus fulva*, *Cochlicopa* spp.

* Based on (Korkina and Vorobeichik, 2021; Vorobeichik et al., 2022; Vorobeichik et al., 2021; Vorobeichik et al., 2019)

** Phytosaprophages

*** Omnivores

**** Like *Lumbricus terrestris* or *Allolobophora longa*

Table S3. Density (ind. m^{-2}) of macrofauna in the study site (±SE)

Taxon	Density
Mermithidae	45 ± 12
Lumbricidae, worms	322 ± 78
Lumbricidae, cocoons	195 ± 73
Lumbricidae, cocoon exuvium	660 ± 74
Enchytraeidae	357 ± 65
Aranei	247 ± 24
Opilliones	7 ± 1
Lithobiidae	195 ± 18
Geophilomorpha	148 ± 19
Diplopoda	0
Diptera, Nematocera, l.+p.	997 ± 402
Diptera, Brachycera, l.+p.	147 ± 12
Hemiptera phytophaga, i.+l.	12 ± 5
Homoptera, Coccodea, i.+l.	32 ± 10
Lepidoptera, l.+p.	8 ± 5
Hymenoptera phytophaga, l.+p.	3 ± 1
Carabidae, i.	12 ± 1
Carabidae, l.	7 ± 1
Staphylinidae, i.	115 ± 16
Staphylinidae, l.+p.	32 ± 8
Cantharidae, l.	22 ± 3
Elateridae, l.+p.	108 ± 14
Curculionidae, l.+p.	25 ± 7
Coleoptera varia, i.	15 ± 4
Coleoptera varia, l.+p.	58 ± 6
Mollusca	743 ± 117
Total	4510 ± 456

The sampling plot (10×10 m) was a statistical unit (n = 3); the arithmetic mean for five soil monoliths was calculated previously for each plot. Soil macrofauna (including enchytraeids) were hand-sorted out of soil monoliths 20 × 20 cm in area and 25–30 cm in depth, depending on the occurrence of macroinvertebrates. Census was taken in July of 2019. Developmental stages: (i) imago, (l) larva, (p) pupa or pseudopupa.

List of earthworm species (percentage is in parentheses): *Rhiphaeodrilus diplotetratheca* (77.2%), *Dendrobaena octaedra* (15.5%), *Eisenia atlavinyteae* (0.5%), *Dendrodrilus rubidus* (1.6%), *Aporrectodea rosea* (1.0%), *Perelia tuberosa* (1.0%), *Octolasion lacteum* (2.1), *Aporrectodea caliginosa caliginosa* (1.0%).

Supplementary figures

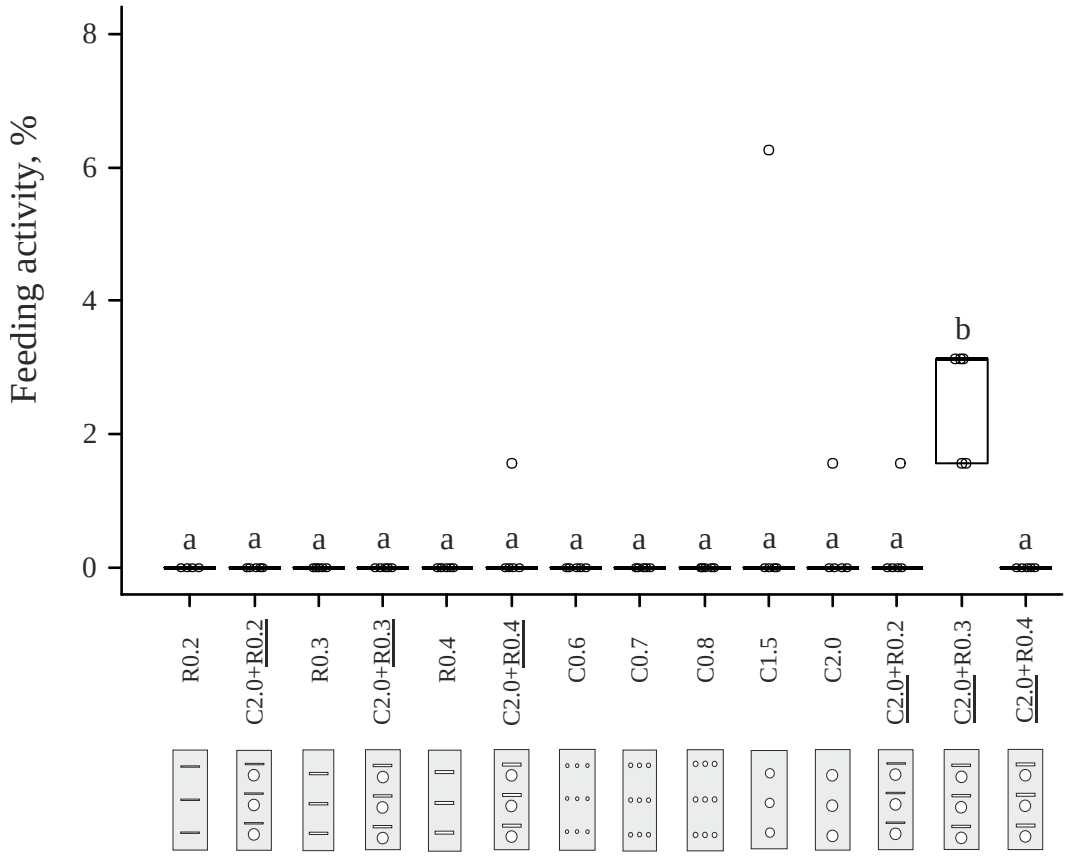

Fig. S3. Feeding activity (% per 10 days) in the control boxes. Strip was a statistical unit (n = 11). Note the different scale of the Y-axis compared to Fig. 2 in the main text.

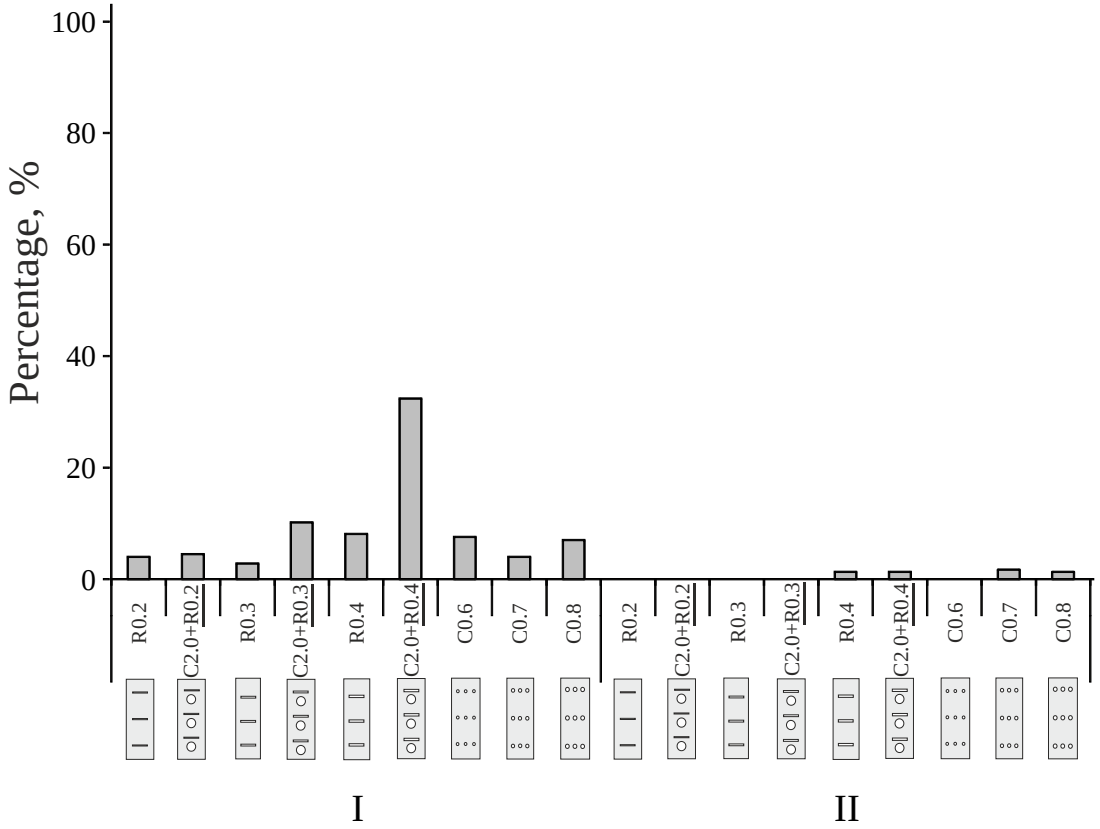

Fig. S4. Frequency of slight damage to the bait surface (%) in the boxes with earthworms (I) and control boxes (II).

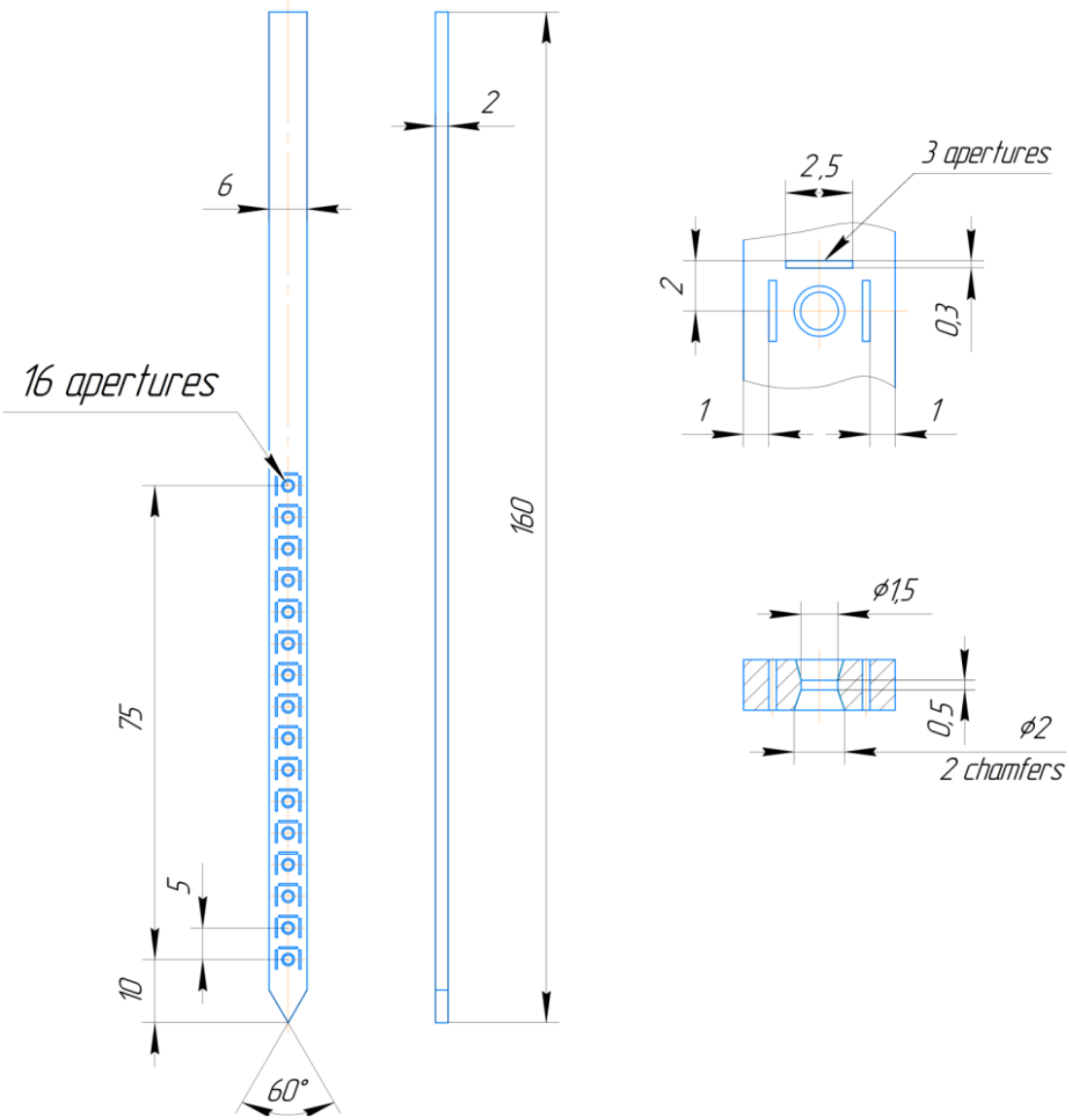

Fig. S5. Schematic view of the strip for the differential BLT. Dimensions are in millimeters. The drawing is based on ISO 18311.

References

Korkina, I.N., Vorobeichik, E.L., 2021. Non-typical degraded and regraded humus forms in metal-contaminated areas, or there and back again. Geoderma 404, 115390. https://doi.org/10.1016/j.geoderma.2021.115390

Vorobeichik, E., Nesterkov, A., Ermakov, A., Zolotarev, M., Grebennikov, M., 2022. Diversity and abundance of soil macroinvertebrates along a contamination gradient in the Central Urals, Russia. Biodivers. Data J. 10, e76968. https://doi.org/10.3897/BDJ.10.e76968

Vorobeichik, E., Nesterkov, A., Golovanova, E., Nesterkova, D., Ermakov, A., Grebennikov, M., 2021. Long-term dynamics of the abundance of earthworms and enchytraeids (Annelida, Clitellata: Lumbricidae, Enchytraeidae) in forests of the Central Urals, Russia. Biodivers. Data J. 9, e75466. https://doi.org/10.3897/BDJ.9.e75466

Vorobeichik, E.L., Ermakov, A.I., Grebennikov, M.E., 2019. Initial stages of recovery of soil macrofauna communities after reduction of emissions from a copper smelter. Rus. J. Ecol. 50, 146–160. https://doi.org/10.1134/S1067413619020115